This drawing is the property of VAT.

Revision

Customer number

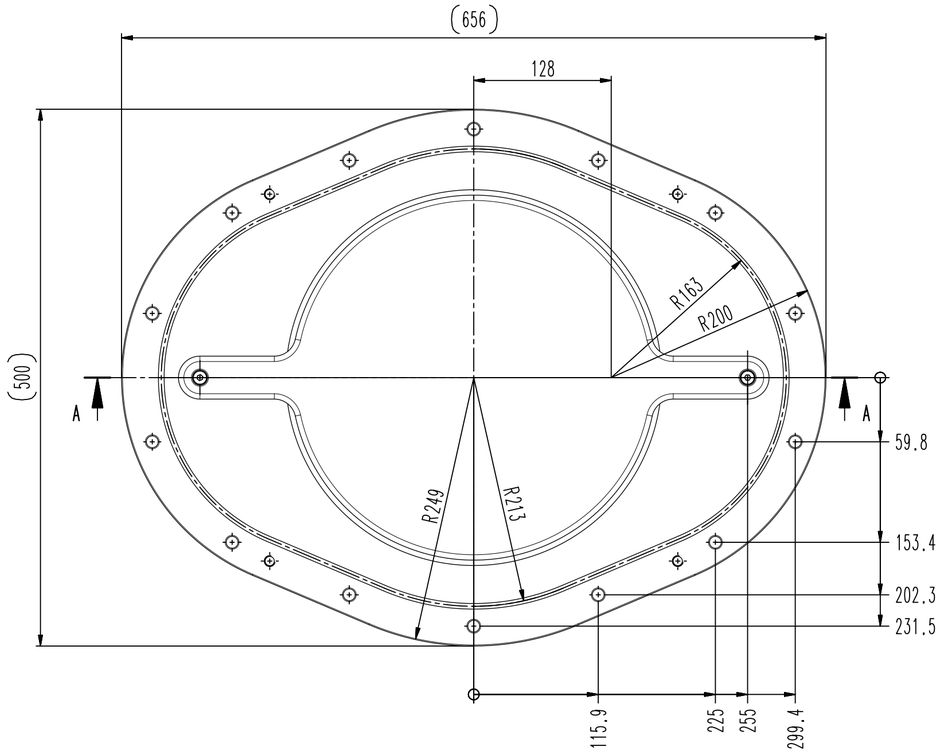

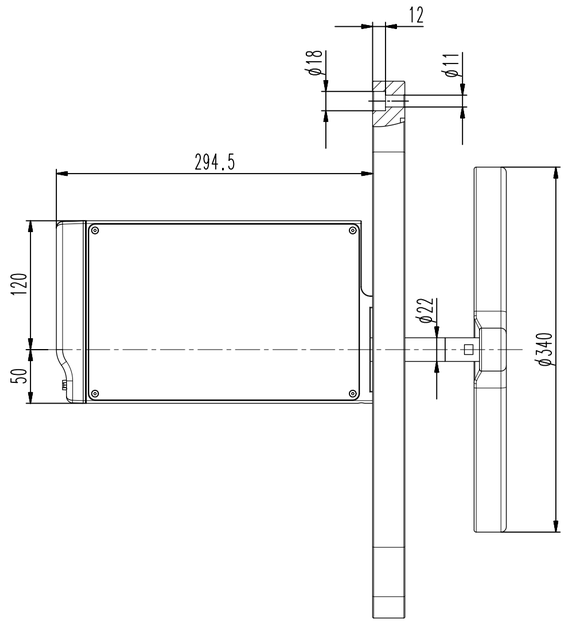

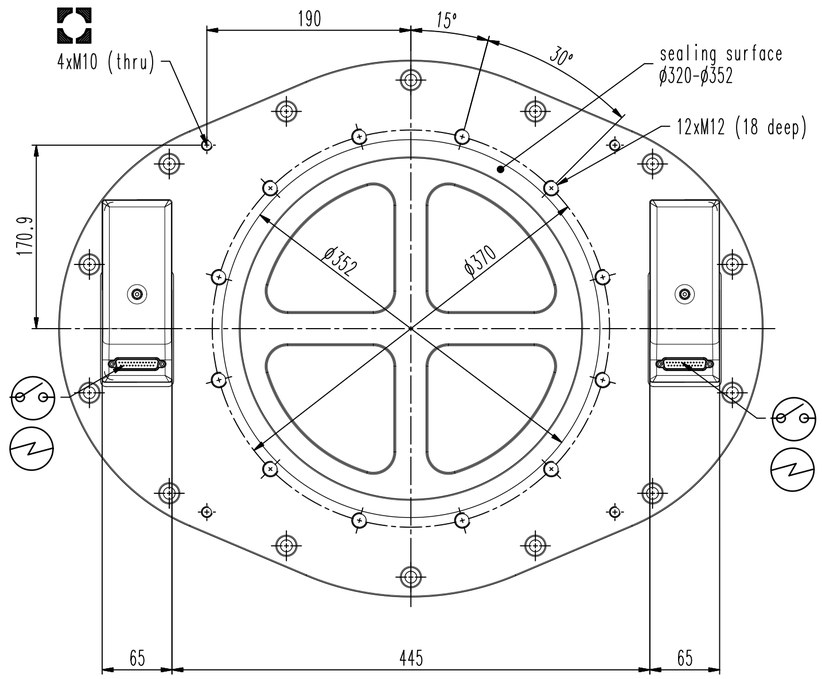

A-A

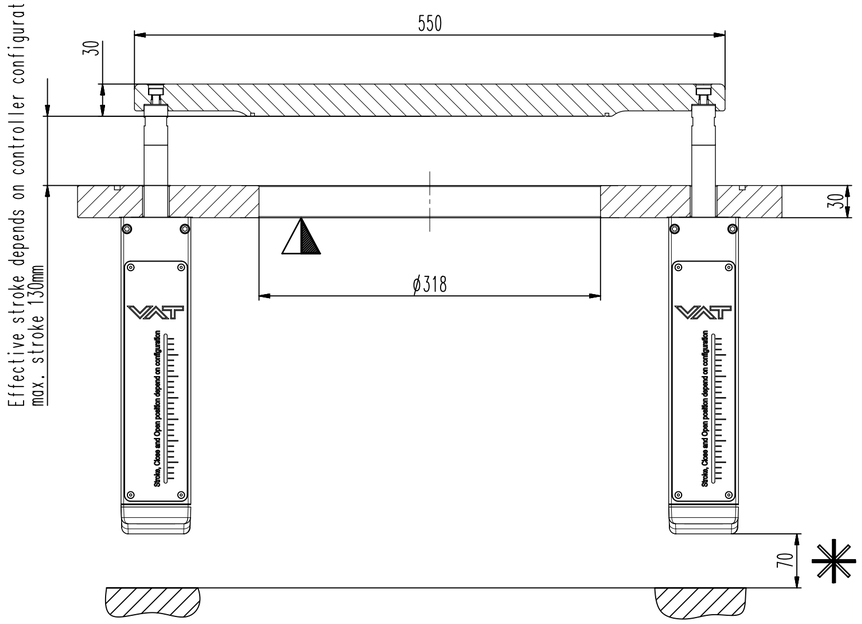

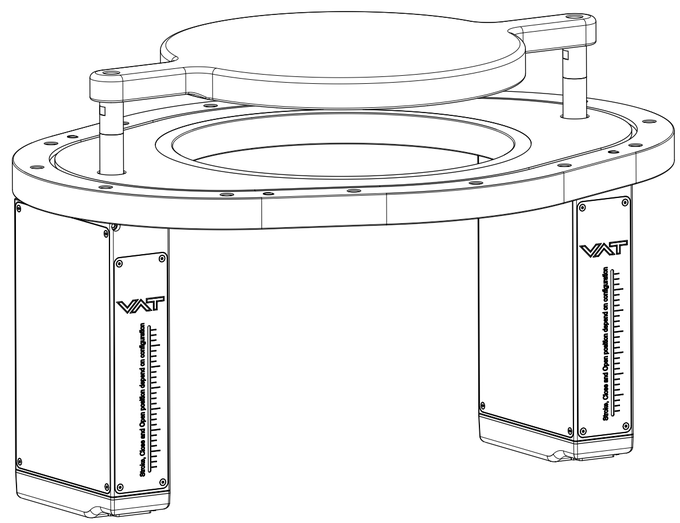

- Seat side
- Comp. air connection
- Electrical connection
- Leak detection port
- Mech. pos. indication
- Position indicator
- Required for dismantling
- Emergency actuation
- For attachment
- Bake-out area
- Differential pumping port

Symmetrical Control System

VAT Vakuumventile AG
CH-9469 Haag , Switzerland
Tel ++41 81 7716161 Fax ++41 81 7714830

Rev. Date: 07.02.14
Visa: TMI

Dimensional Drawing

Series	Ordering No.
670	67050-JA52-AAT1

Projection E	DN	Flange
	320	JIS

Rev.: 736024

FOR INFORMATION ONLY 07.17.16